Dynamic Partial Reconfiguration

Arun Murugappan, Pranav T Varkey, Shrikrishna Pandit

Table of contents

- CFU playground- Recap
- Controllers

Recap

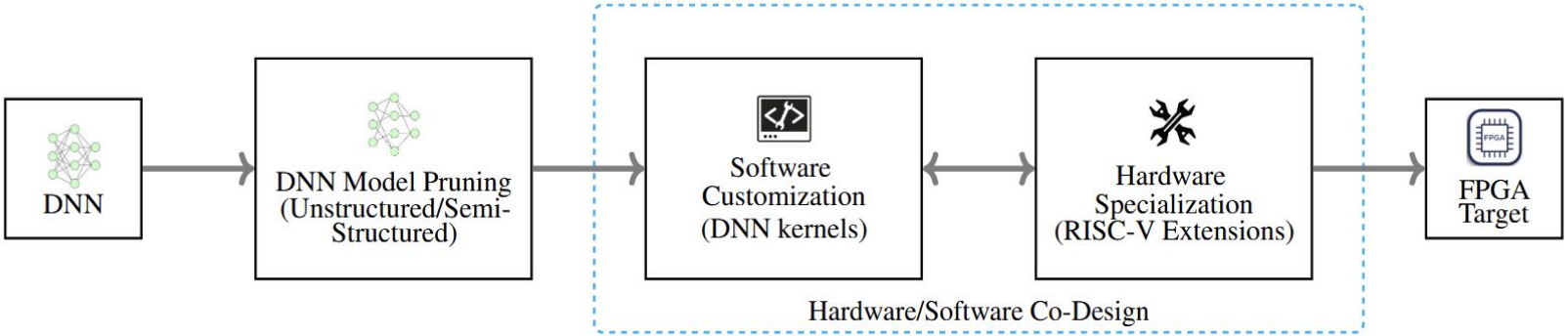
DNN
DNN Model Pruning (Unstructured/Semi-Structured)
Software Customization (DNN kernels)
Hardware Specialization (RISC-V Extensions)
FPGA Target
Hardware/Software Co-Design

CFU Architecture

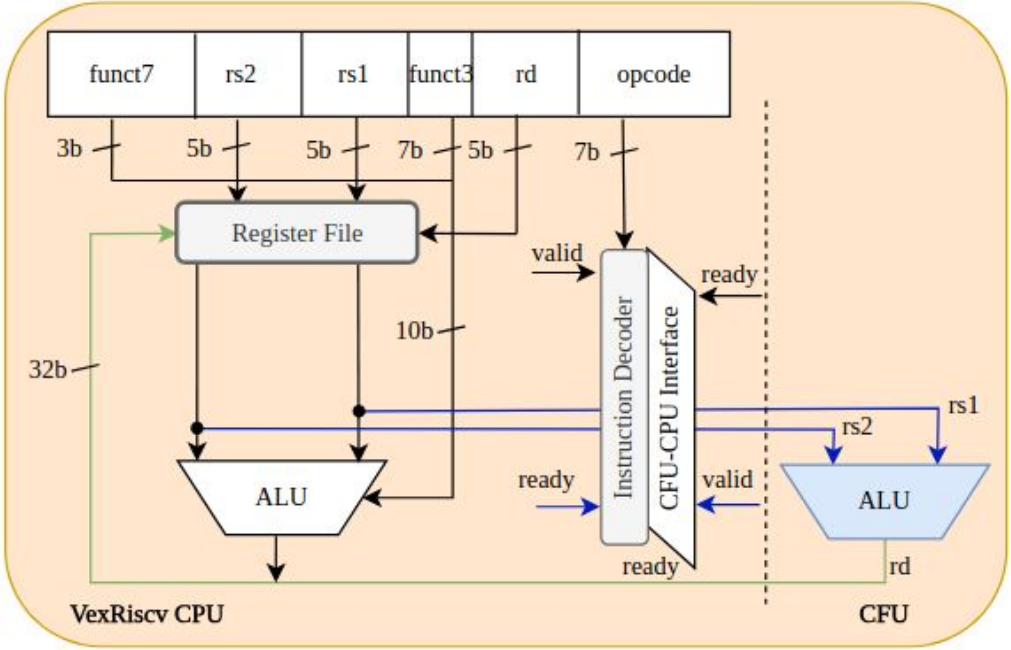

Storing partial-bitstreams

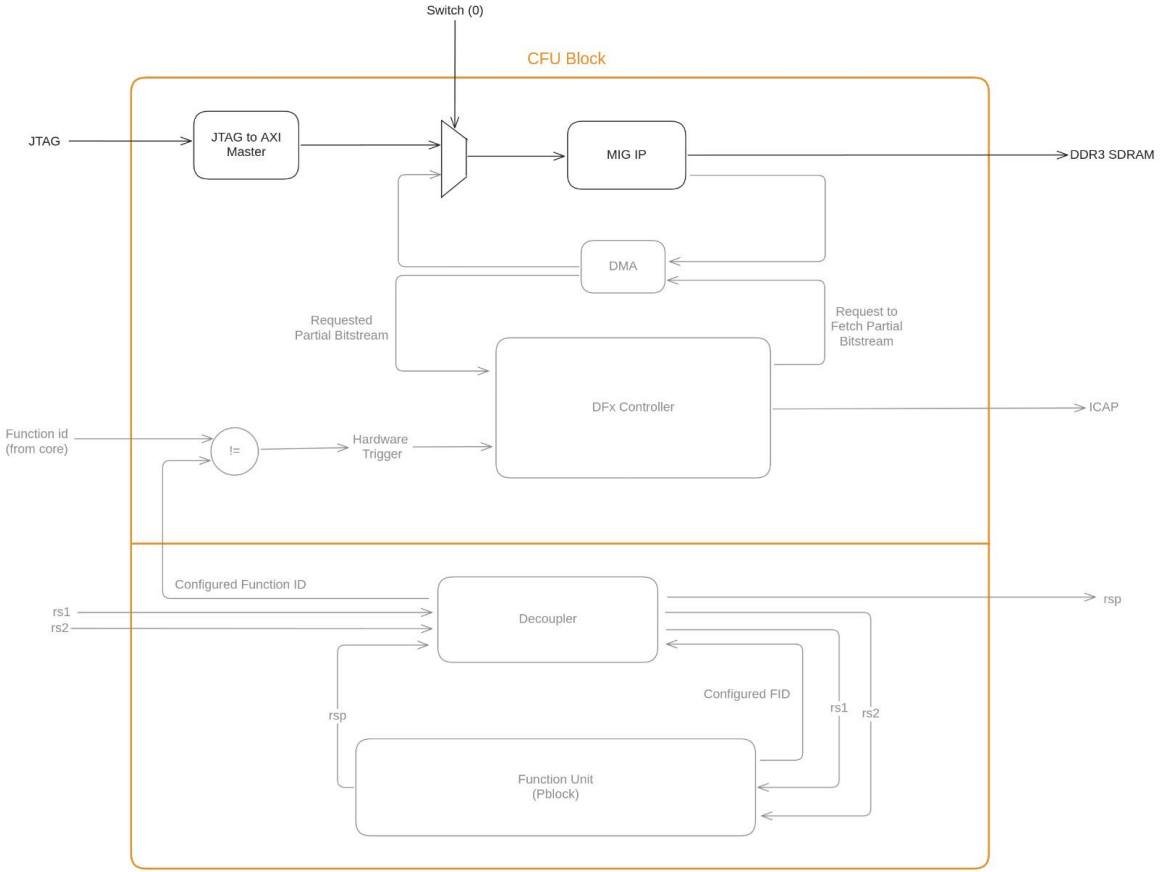

Custom Instruction Flow

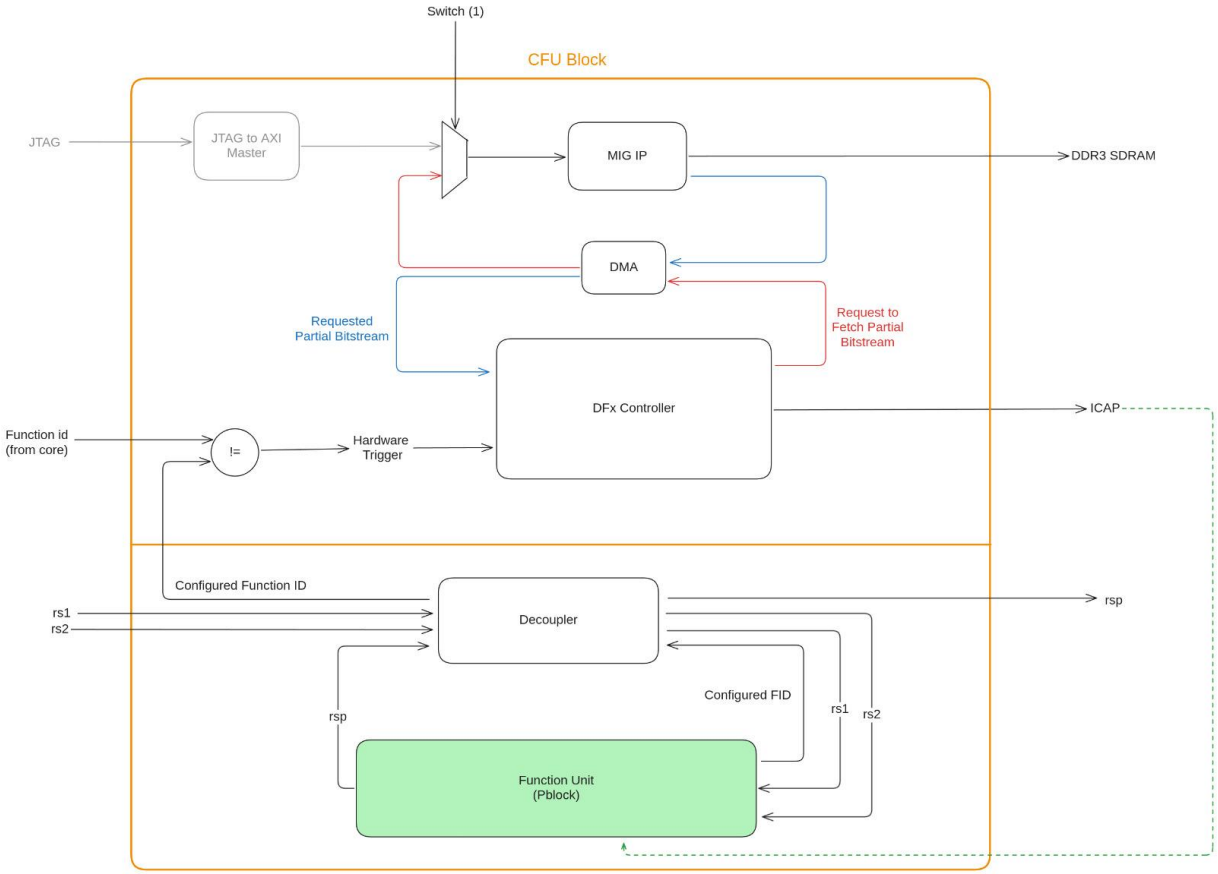

Thank you